INSTRUCTIONS
FOR
THD-U SERIES
HOT AIR MATERIAL DRYERS

Our PPE Material Dryers are a PPE exclusive only available from PPE. Do not confuse these with any other make, model or manufacturer.

© Copyright Plastic Process Equipment, Inc 2015

PLASTIC PROCESS EQUIPMENT, INC. www.ppe.com • e-mail: sales@ppe.com

PPE WEST 6385 Montessouri Street, Las Vegas, Nevada 89113
702-433-6385 • 800-258-8877 • Fax: 702-433-6388

PPE SOUTH 11218 Challenger Avenue, Odessa, Florida 33556
727-834-8888 • 800-282-6783 • Fax: 727-834-8873

PPE 8303 CORPORATE PARK DRIVE, MACEDONIA (Cleveland), OHIO 44056, USA
216-367-7000 • **Toll Free: 800-321-0562** • Fax: 216-367-7022 • Order Fax: 800-223-8305

Toll Free: USA, Canada & Mexico **800-362-0706**

© Copyright Plastic Process Equipment, Inc 2015

Contents

1. Installation ----------1
2. Operation Guide ----------2-5
3. Service & Maintenance ----------5
4. Troubleshooting ----------6
5. Drawing & Parts List ----------7-8
6. Electrical ----------9-14

© Copyright Plastic Process Equipment, Inc 2015

Installation

A) Make sure voltage and frequency are correct before installing the dryer being installed.
B) Power cable & ground must conform to local regulations.
C) Make sure power connections are tightened securely.
D) Dryer requires 4 wire 3 phase wire.
E) Power requirements:

230V/60H/3PH
460V/60H/3PH

6.1 Description of Control Panel

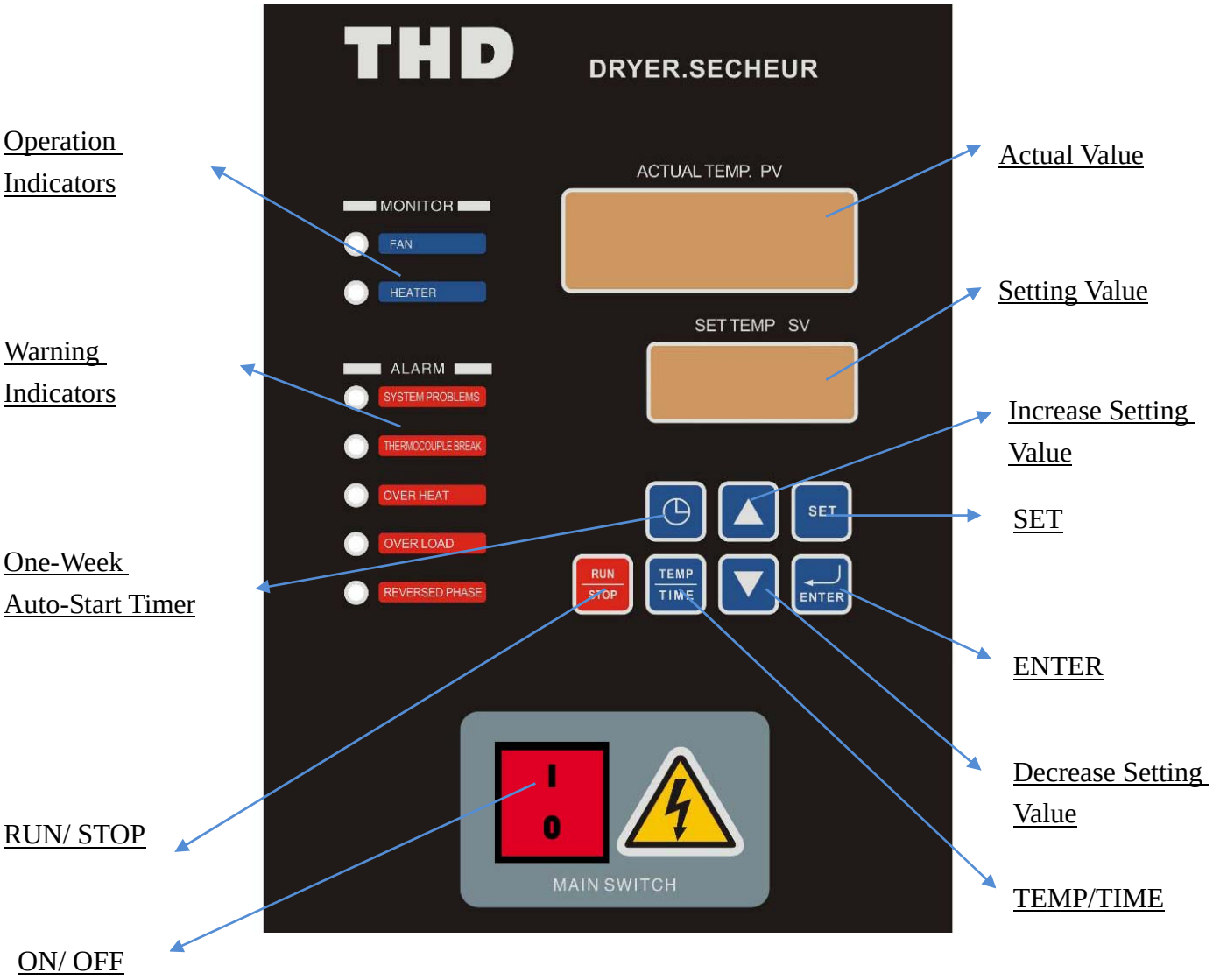

Operation of the Machine

Turning on Machine

A) Turn on main power switch.

B) Press “RUN/STOP” button to start machine.

Changing Celsius to Fahrenheit

A) Press and hold for 5 seconds the “Enter” button. The “SV & PV Displays” will show either “Celsius or Fahrenheit”. Press “Enter” to confirm setting.

Intermittent Drying

A) Press the “TEMP/TIME” and “SET” button at the same time to enter “SETTING MODE”

B) Press the “SET” button to change the “temp setup” to “time setup”, then press the “TEMP/TIMER” button to enter into setup mode, at this time the “SV/set point value flickers” and the PV/process value displays “0 on”, this value represents the drying time. Press the “UP/DOWN” button to increase/decrease duration of drying time. Press the “ENTER” button to confirm the “0 on” setting and start entering the “0 off” value which is the time the dryer is “off”. Press the “ENTER” button to confirm setting.

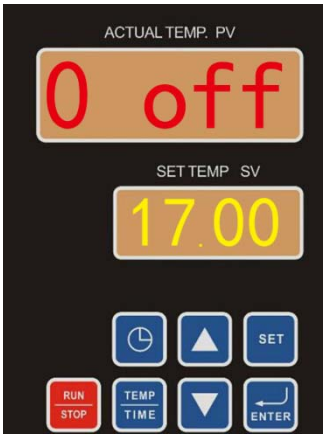

Note: If ‘‘0 on’’ is set to 4:00 and ‘‘0 off’’ is set to 5:00 this means that the dryer will run for 4 hours and then be shut off for 5hours. To cancel intermittent drying the ‘‘0 on and 0 off’’ values must be 0.

Weekly Time Setup

A) Press the ‘‘TEMP/TIME’’ and ‘‘SET’’ button at the same time to enter the ‘‘SETTING MODE’’.

B) Press the ‘‘UP/DOWN’’ button to increase or decrease the time value in ‘‘SV/setup value’’ for ‘‘1 on ’’. Press the ‘‘ENTER’’ button to confirm the setting. This will set the dryer run. The numbers represent the day:

1 = Monday
2 = Tuesday
3 = Wednesday
4 = Thursday
5 = Friday
6 = Saturday
7 = Sunday

C) Press the ‘‘UP/DOWN’’ button to increase or decrease the time value in ‘‘SV/setup value ‘‘for 1 off’’ This will set the dryer off time. Press enter to confirm the setting. Press the ‘‘SET’’ button to return to default when programming is complete.

Note: To disable the weekly timer function set all ‘‘on’’ days to ‘‘00’’ time.

D) Setting Current Time

Repeat above steps until ‘‘SV/display’’ shows the current time. Use the ‘‘UP/DOWN’’ buttons to increase or decrease the time displayed. Press the ‘‘ENTER’’ button to confirm the time setting.

Automatic Start up-Weekly

When starting or stopping the dryer press the ‘‘AUTO’’ button to activate the weekly ‘‘ON/OFF’’ timing cycles. To cancel this function press the ‘‘AUTO’’ button again.

E) Safety Override Temperature Protection

Set ‘‘High Temperature Protection Switch’’ to 10-15 degrees Celsius over ‘‘Set Point Value’’ If the ‘‘Process Temperature’’ goes over the temperature on this switch, it will trip a circuit breaker for the heater.

Service & Maintenance

Functions

Password Lock

A) Press and hold the ‘‘SET’’ button until ‘‘F-20’’ is displayed in the ‘‘PV display’’. Press the ‘‘UP/DOWN’’ button to enter ‘‘0021’’ in the ‘‘set value display’’ and press the ‘‘ENTER’’ button. At this time the ‘‘PV/display’’ will show ‘‘F-04’’. This us the ‘‘LOCK’’ function which will keep the parameters from being changed. Use the ‘‘UP/DOWN’’ button to toggle between ‘‘LOCK & OFF’’ Press the ‘‘SET’’ button to confirm.

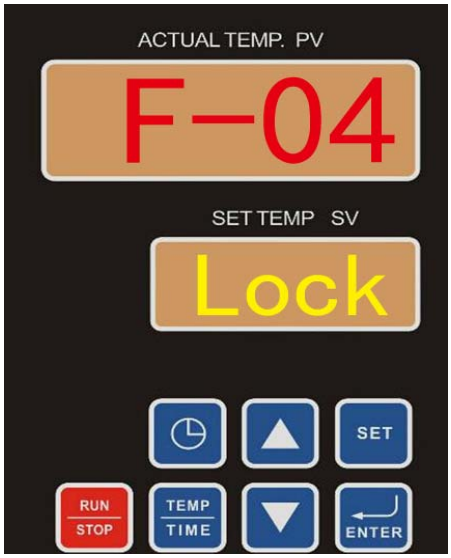

Error Code

Code	Explanation
E-01	Thermocouple break
E-02	Phase reversed
E-03	Overload
E-04	Over temperature, power is cut off
E-08	Memory error

Troubleshooting

Troubles	Possible reasons	Solutions
The rotating direction of blower fan is not as indicated.	1.Blower phase-reversal	1. Exchange two of the electrical wires
Blower does not run.	1. Motor failures 2. Failures of solenoid switch	1. Repair or replace 2. Repair or replace
The blower and heater do not work.	1. Tripping of overload relay 2. Problems of transformer 3. Fuse melted 4. Trouble of power supply	1. Repair or replace 2. Repair or replace 3. Repair or replace 4. Reconnect the power supply
Blower works but heater does not.	1. Poor connection of pipe heater 2. Problems with solenoid switch 3. Pipe heater problems 4. Temp. controller problems 5. Thermocouple problems	1. Repair or replace 2. Repair or replace 3. Repair or replace 4. Repair or replace 5. Replace thermocouple
The blower is working, but air temperature doesn't increase.	1.Poor connection of pipe heater 2. Short circuit of overheat protector or tripping off 3. Phase shortage of solenoid switch 4. Temp. controller damaged.	1. Repair or replace 2. Repair or reset 3. Repair or replace 4. Replace temp. controller
The blower doesn't work, but the air temperature is too high.	1. Hot air pipe jammed 2. Errors or problems of the temp. controller	1. Cleaning 2. Replace temp. controller or adjust the knob

Note: Main switch must be turned "OFF" when checking or replacing the components of the machine.

Specifications

MODEL	CAPACITY	WATTAGE KV	DIM	INLET DIA	OUTLET DIA	WGT
THD-80U	100LBS	3.9	28.5”W X 22”D X 58”T	2.5”	2”	111LB
THD-120U	160LBS	3.9	28.5”W X 22”D X 68.3”T	2.5”	2”	133LB
THD-300U	400LBS	23	37.2”W X 36.6”D X 82.01”T	3.0”	2.5”	287LB

Drawing and Parts List

Structural Drawing

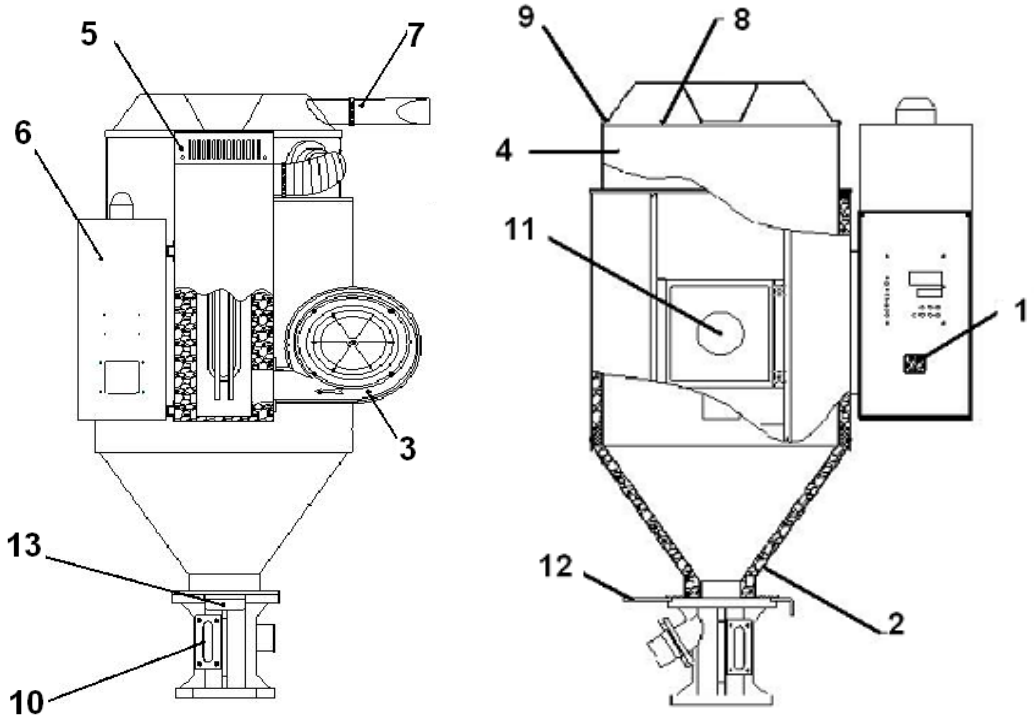

1. Main switch
2. Insulated layer
3. Blower
4. Storage drum
5. Electric heating box
6. Control cabinet
7. Overheat sensor
8. Hopper lid
9. Seal ring
10. sight-glass window
11. Down-Blowing pipe
12. Shut-off plate
13. Standard base

Drawing and Parts List

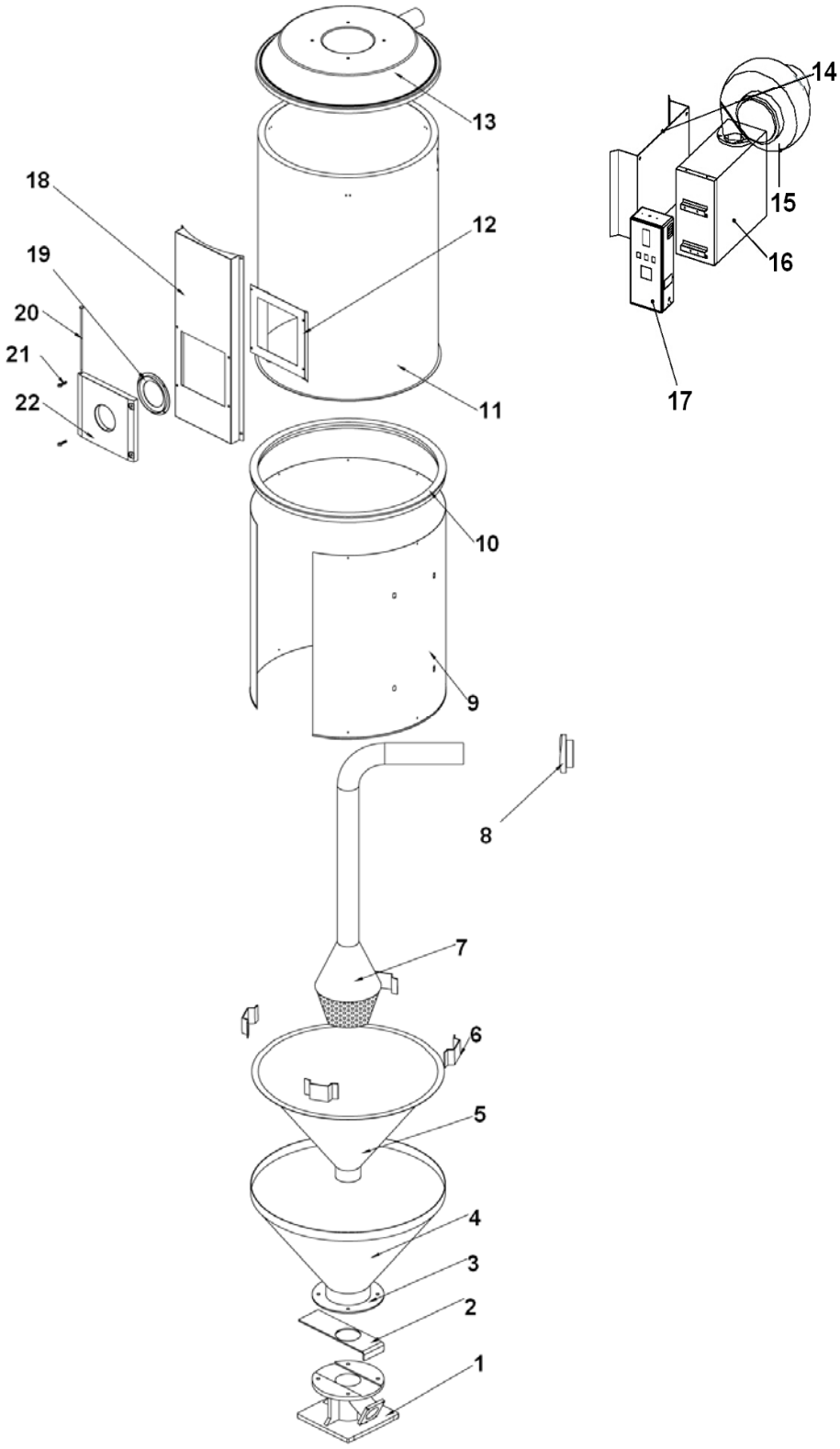

(THD-80U-300U)

1.Standard base

2.Shut-plate

3.Hopper flange

4.Outside hopper

5.Inner hopper

6.Block （Model:TBL)

7.Air dispersion cone

8.Down blowing pipe flange

9.Heat protection board

10.Ring (Model:TRI)

11.Storage drum

12.Frame

13.Hopper cover

14.Installation plate

15.Fan/blower (Model:PBT)

16.Heating box

17.Control cabinet

18.Door frame

19.Window flange

20.Door latch

21.Screw

22.Window door

Electrical Diagram

Main Circuit

Apply THD-80U~ THD300U

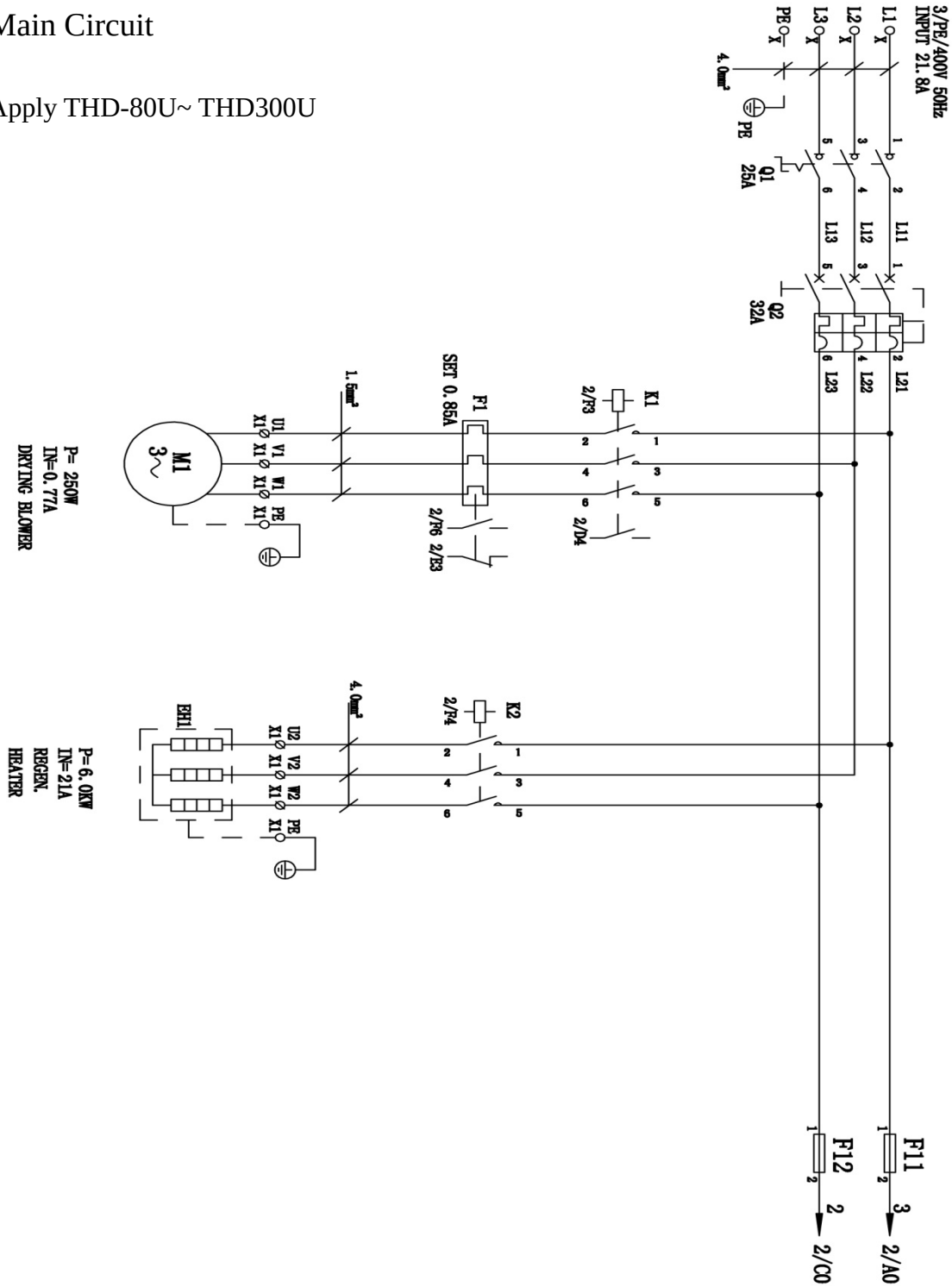

Electrical Diagram

Control Circuit

Apply THD-80U~ THD300U

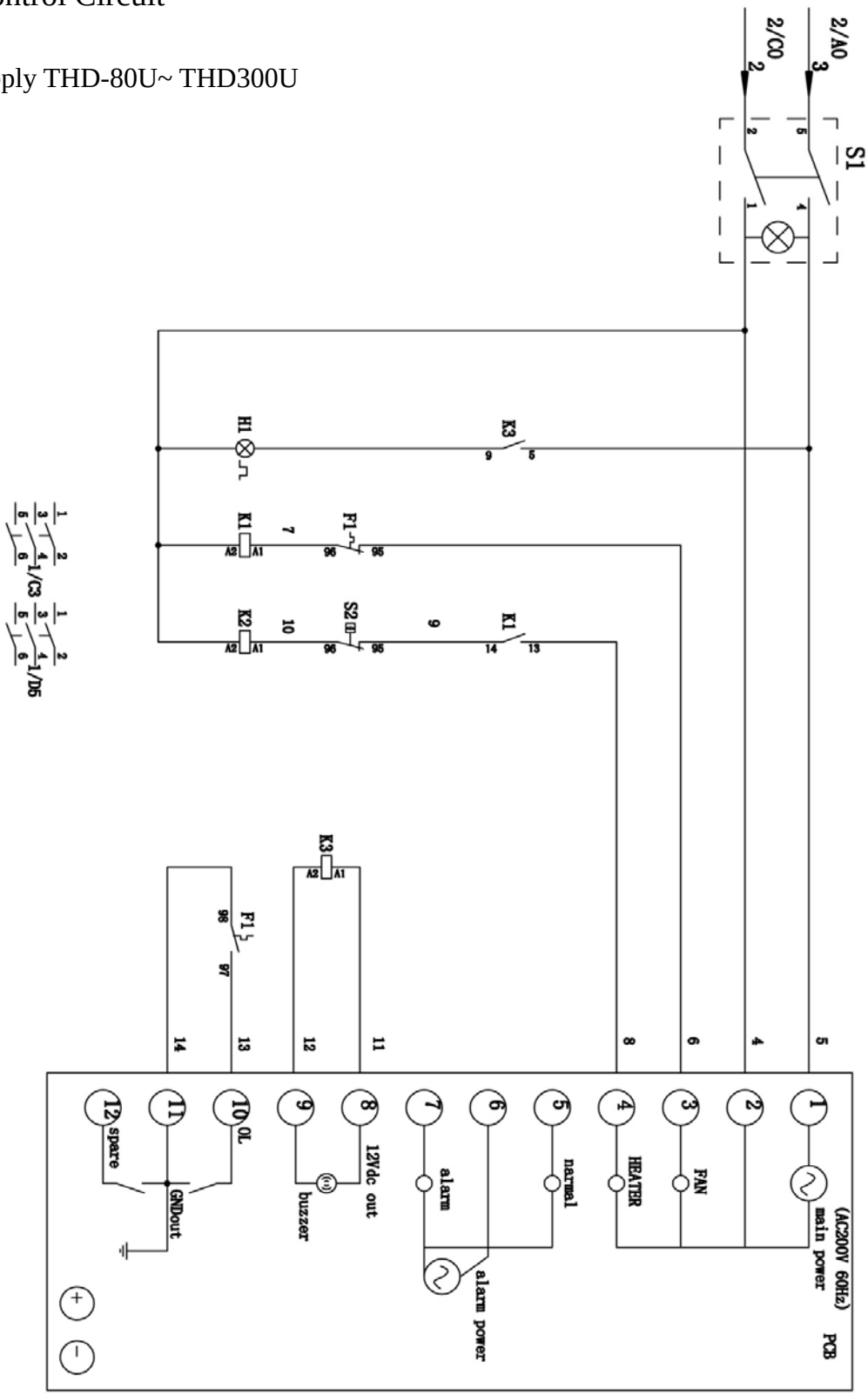

Electrical Diagram

Thermocouple and Terminal Layout

Apply THD-80U ~ THD300U

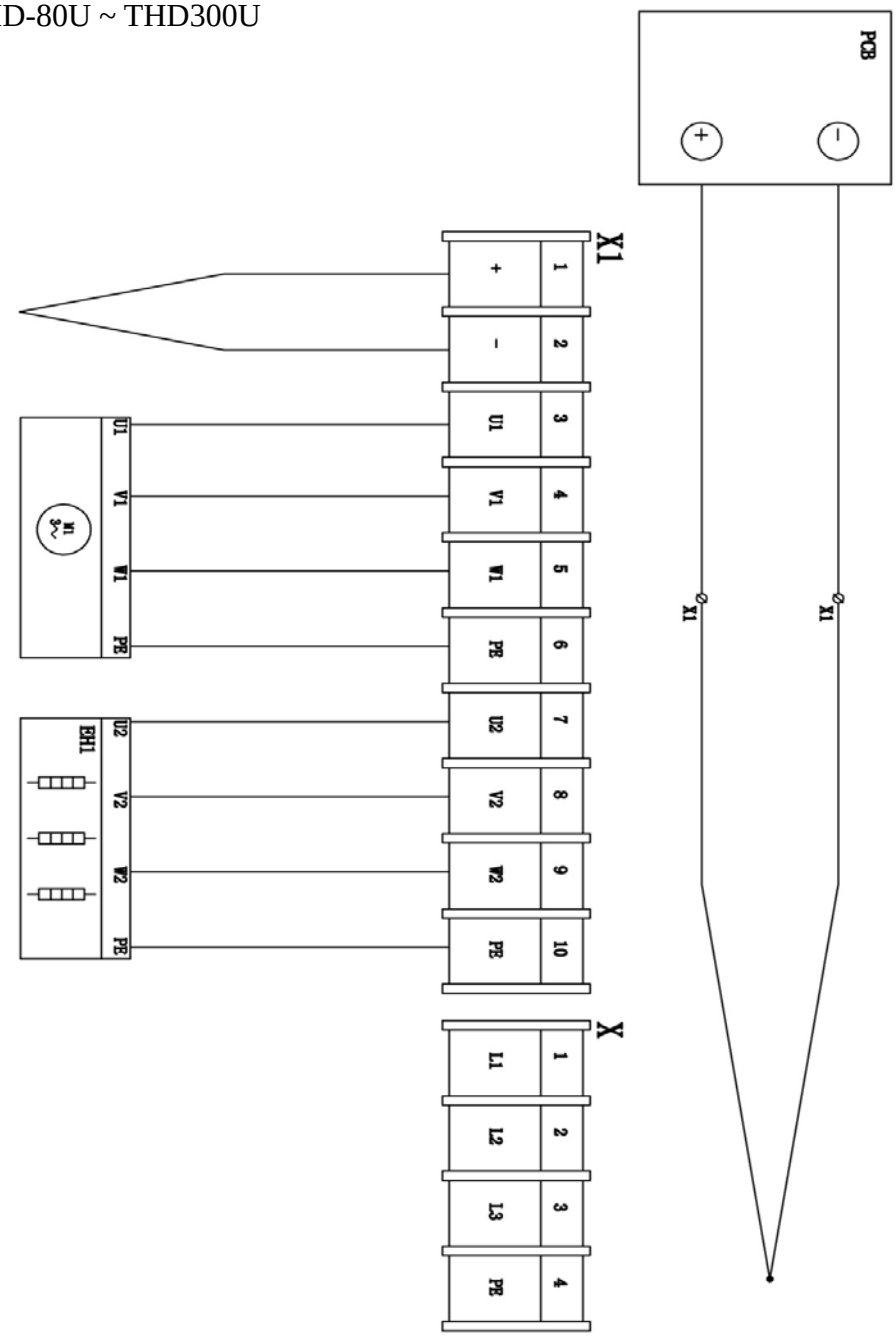

Electrical Diagram

Components layout

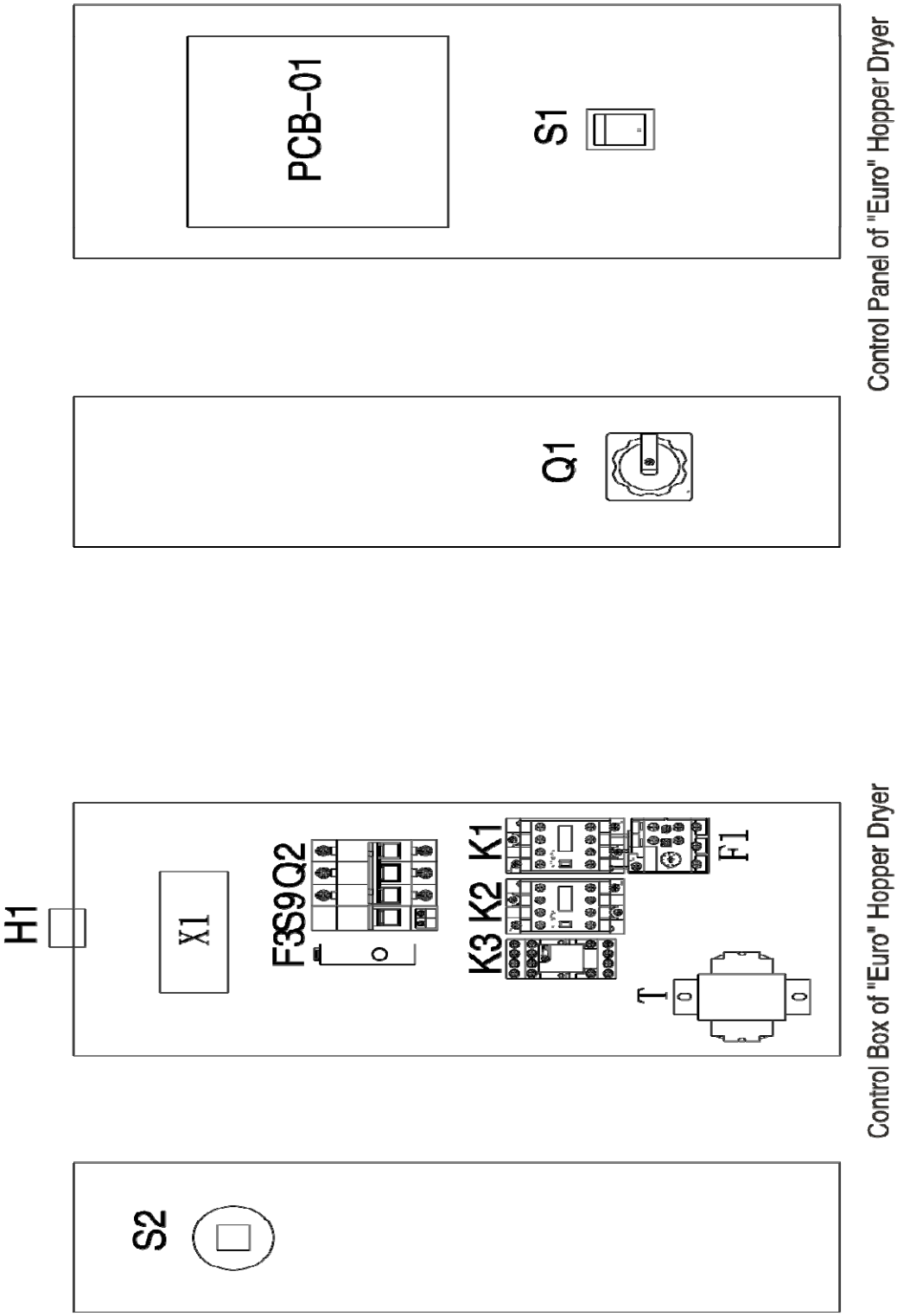

Electrical Diagram

THD-80U & THD-120U

NO	Symbol	Name	Specification	Part No.
1	Q1	Main switch	16A 690V 3P	GLD2-32 3P 16A
2	Q2	Circuit breaker	15A 400VAC 3P	D247-60 3P 15A
3	K1		9A 3P 1NO 230V 50/60 Hz	3TB4010 230V
4	K2		12A 3P 230V 50/60 Hz	3TB4110
5	K3	Middle relay	12VDC	LJQ-12F 12VDC
6	F1	Overload relay	2A 250VAC	3UA5440 0.4-0.63A
7	F11	Fuse	2A 250VAC	FUSE-2A
8	T	Transformer	IN=400V OUT=230V 300mA	300mA
9	PC	PCB	M0015A 230VAC	PCB 230V
10	S1	Control switch	4P BK	150A250V AC/UT85
11	S2	Over protector	250V 0-300℃	EGO-300 degree
12	S3	Thermocouple		
13	H1	Alarm lamp	YL 230V 50/60HZ	LTE-3051
14	X1	Terminal board	2.5mm2PE	2504
15		Terminal board	2.5mm2PE	2504
16	M1	Blower	3P 400v 50/60HZ 120W2P	P50BT
17	EH	Heater	400V 50HZ 4.5KW	4.5KW

Electrical Diagram

THD300U

NO	Symbol	Name	Specification	Part No.
1	Q1	Main switch	32A 690V 3P	GLD2-32 3P 32A
2	Q2	Circuit breaker	32A 400VAC 3P	D247-60 3P 32A
3	K1		9A 3P 1NO 230V 50/60 Hz	3TB4010 230V
4	K2		18A 3P 230V 50/60 Hz	3TB4422
5	K3	Middle relay	12VDC	LJQ-12F 12VDC
6	F1	Overload relay	0.63-1A	3UA5440 0.63-1A
7	F11	Fuse	2A 250VAC	FUSE-2A
8	T	Transformer	IN=400V OUT=230V 300mA	300mA
9	PC	PCB	M0015A 230VAC	PCB 230V
10	S1	Control switch	4P BK	150A250V AC/UT85
11	S2	Over protector	250V 0-300℃	EGO-300 degree
12	S3	Thermocouple		
13	H1	Alarm lamp	YL 230V 50/60HZ	LTE-3051
14	X1	Terminal board	2.5mm2PE	2504
15		Terminal board	2.5mm2PE	2504
16		Terminal board	4mm2PE	2505
17	M1	Blower	3p 400V 50/60hz 120W	P200BT
18	EH	Heater	400V 50HZ 12.0KW	12KW

TEMPERATURE CONVERSION TABLE

Numbers in center column (between those marked C and F) refer to temperature, whether Centigrade or Fahrenheit, which it is desired to convert into the other scale. To convert from Fahrenheit to Centigrade find equivalent temperature in left hand column marked C; in like manner find equivalent temperature in right hand column when converting from Centigrade to Fahrenheit. Example 50°F is 10°C; 50°C is 122°F.

°C		°F	°C		°F	°C		°F	°C		°F	°C		°F	°C		°F	°C		°F
-40.0	-40	-40.0	-1.1	30	86.0	26.7	80	176.0	71.1	160	320.0	137.8	280	536.0	338	640	1184	604	1120	2048
-38.9	-38	-36.4	-0.6	31	87.8	27.2	81	177.8	72.2	162	323.6	140.6	285	545.0	343	650	1202	609	1130	2066
-37.8	-36	-32.8	0.0	32	89.6	27.8	82	179.6	73.3	164	327.2	143.3	290	554.0	349	660	1220	615	1140	2084
-36.7	-34	-29.2	0.6	33	91.4	28.3	83	181.4	74.4	166	330.8	146.1	295	563.0	354	670	1238	620	1150	2102
-35.6	-32	-25.6	1.1	34	93.2	28.9	84	183.2	75.6	168	334.4	148.9	300	572.0	360	680	1256	626	1160	2120
-34.4	-30	-22.0	1.7	35	95.0	29.4	85	185.0	76.7	170	338.0	151.7	305	581.0	365	690	1274	631	1170	2138
-33.3	-28	-18.4	2.2	36	96.8	30.0	86	186.8	77.8	172	341.6	154.4	310	590.0	371	700	1292	637	1180	2156
-32.2	-26	-14.8	2.8	37	98.6	30.6	87	188.6	78.9	174	345.2	157.2	315	599.0	376	710	1310	642	1190	2174
-31.1	-24	-11.2	3.3	38	100.4	31.1	88	190.4	80.0	176	348.8	160.0	320	608.0	382	720	1328	648	1200	2192
-30.0	-22	-7.6	3.9	39	102.2	31.7	89	192.2	81.1	178	352.4	162.8	325	617.0	387	730	1346	653	1210	2210
-28.9	-20	-4.0	4.4	40	104.0	32.2	90	194.0	82.2	180	356.0	165.6	330	626.0	393	740	1364	659	1220	2228
-27.8	-18	-0.4	5.0	41	105.8	32.8	91	195.8	83.3	182	359.6	168.3	335	635.0	399	750	1382	664	1230	2246
-26.7	-16	3.2	5.6	42	107.6	33.3	92	197.6	84.4	184	363.2	171.1	340	644.0	404	760	1400	670	1240	2264
-25.6	-14	6.8	6.1	43	109.4	33.9	93	199.4	85.6	186	366.8	173.9	345	653.0	410	770	1418	675	1250	2282
-24.4	-12	10.4	6.7	44	111.2	34.4	94	201.2	86.7	188	370.4	176.7	350	662.0	415	780	1436	681	1260	2300
-23.3	-10	14.0	7.2	45	113.0	35.0	95	203.0	87.8	190	374.0	179.4	355	671.0	421	790	1454	686	1270	2318
-22.2	-8	17.6	7.8	46	114.8	35.6	96	204.8	88.9	192	377.6	182.2	360	680.0	426	800	1472	692	1280	2336
-21.1	-6	21.2	8.3	47	116.6	36.1	97	206.6	90.0	194	381.2	185.0	365	689.9	432	810	1490	697	1290	2354
-20.0	-4	24.8	8.9	48	118.4	36.7	98	208.4	91.1	196	384.8	188.2	370	698.0	438	820	1508	704	1300	2372
-18.9	-2	28.4	9.4	49	120.2	37.2	99	210.2	92.2	198	388.4	190.6	375	707.0	443	830	1526	708	1310	2390
-17.8	0	32.0	10.0	50	122.0	37.8	100	212.0	93.3	200	392.0	193.3	380	716.0	449	840	1544	715	1320	2408
-17.2	1	33.8	10.6	51	123.8	38.9	102	215.6	94.4	202	395.6	196.1	385	725.0	454	850	1562	719	1330	2426
-16.7	2	35.6	11.1	52	125.6	40.0	104	219.2	95.6	204	399.2	198.9	390	734.0	460	860	1580	726	1340	2444
-16.1	3	37.4	11.7	53	127.4	41.1	106	222.8	96.7	206	402.8	201.7	395	743.0	465	870	1598	734	1350	2462
-15.6	4	39.2	12.2	54	129.2	42.2	108	226.4	97.8	208	406.4	204.4	400	752.0	471	880	1616	737	1360	2480
-15.0	5	41.0	12.8	55	131.0	43.3	110	230.0	98.9	210	410.0	210.0	410	770.0	476	890	1634	741	1370	2498
-14.4	6	42.8	13.3	56	132.8	44.4	112	233.6	100.0	212	413.6	215.6	420	788.0	482	900	1652	748	1380	2516
-13.9	7	44.6	13.9	57	134.6	45.6	114	237.2	101.1	214	417.2	221.1	430	806.0	487	910	1670	752	1390	2534
-13.3	8	46.4	14.4	58	136.4	46.7	116	240.8	102.2	216	420.8	226.7	440	824.0	493	920	1688	760	1400	2552
-12.8	9	48.2	15.0	59	138.2	47.8	118	244.4	103.3	218	424.4	232.2	450	842.0	498	930	1706	765	1410	2570
-12.2	10	50.0	15.6	60	140.0	48.9	120	248.0	104.4	220	428.0	237.8	460	860.0	504	940	1724	771	1420	2588
-11.7	11	51.8	16.1	61	141.8	50.0	122	251.0	105.6	222	431.6	243.3	470	878.8	510	950	1742	776	1430	2606
-11.1	12	53.6	16.7	62	143.6	51.1	124	255.2	106.7	224	435.2	248.9	480	896.0	515	960	1760	782	1440	2624
-10.6	13	55.4	17.2	63	145.4	52.2	126	258.8	107.8	226	438.8	254.4	490	914.0	520	970	1778	787	1450	2642
-10.0	14	57.2	17.8	64	147.2	53.3	128	262.4	108.9	228	442.4	260.0	500	932.0	526	980	1796	793	1460	2660
-9.4	15	59.0	18.3	65	149.0	54.4	130	266.0	110.0	230	446.0	265.6	510	950.0	532	990	1814	798	1470	2678
-8.9	16	60.8	18.9	66	150.8	55.6	132	269.6	111.1	232	449.6	271.1	520	965.0	538	1000	1832	804	1480	2696
-8.3	17	62.6	19.4	67	152.6	56.7	134	273.2	112.2	234	453.2	276.7	530	986.0	543	1010	1850	809	1490	2714
-7.8	18	64.4	20.0	68	154.4	57.8	136	276.8	113.3	236	456.8	282.3	540	1004.0	549	1020	1868	815	1500	2732
-7.2	19	66.2	20.6	69	155.2	58.9	138	280.4	114.4	238	460.4	287.8	550	1022.0	554	1030	1886	820	1510	2750
-6.7	20	68.0	21.1	70	158.0	60.0	140	284.0	115.6	240	464.0	293	560	1040	560	1040	1904	827	1520	2768
-6.1	21	69.6	21.7	71	159.8	61.1	142	287.6	116.7	242	467.6	299	570	1058	565	1050	1922	831	1530	2786
-5.6	22	71.6	22.2	72	161.6	62.2	144	291.2	117.8	244	471.2	304	580	1076	571	1060	1940	838	1540	2804
-5.0	23	73.4	22.8	73	163.4	63.3	146	294.8	118.3	245	473.0	310	590	1094	576	1070	1958	842	1550	2822
-4.4	24	75.2	23.3	74	165.2	64.4	148	298.4	121.1	250	482.0	315	600	1112	582	1080	1976	849	1560	2840
-3.9	25	77.0	23.9	75	167.0	65.6	150	302.0	123.9	255	491.0	321	610	1130	587	1090	1994	853	1570	2858
-3.3	26	78.8	24.4	76	168.8	66.7	152	305.6	126.7	260	500.0	326	620	1148	593	1100	2012	860	1580	2876
-2.8	27	80.6	25.0	77	170.6	67.8	154	309.2	129.4	265	509.0	332	630	1166	598	1110	2030	864	1590	2894
-2.2	28	82.4	25.6	78	172.4	68.9	156	312.8	132.2	270	518.0									
-1.7	29	84.2	26.1	79	174.2	70.0	158	316.4	135.0	275	527.0									

PLASTIC PROCESS EQUIPMENT, INC.® www.ppe.com • e-mail: sales@ppe.com

PPE WEST 6385 Montessouri Street, Las Vegas, Nevada 89113 702-433-6385 • 800-258-8877 • Fax: 702-433-6388

PPE SOUTH 11218 Challenger Avenue, Odessa, Florida 33556 727-834-8888 • 800-282-6783 • Fax: 727-834-8873

PPE 8303 CORPORATE PARK DRIVE, MACEDONIA (Cleveland), OHIO 44056, USA 216-367-7000 • Toll Free: 800-321-0562 • Fax: 216-367-7022 • Order Fax: 800-223-8305

Toll Free: USA, Canada & Mexico 800-362-0706

PLASTIC PROCESS EQUIPMENT, INC. www.ppe.com • e-mail: sales@ppe.com

PPE WEST 6385 Montessouri Street, Las Vegas, Nevada 89113
702-433-6385 • 800-258-8877 • Fax: 702-433-6388

PPE SOUTH 11218 Challenger Avenue, Odessa, Florida 33556
727-834-8888 • 800-282-6783 • Fax: 727-834-8873

PPE 8303 CORPORATE PARK DRIVE, MACEDONIA (Cleveland), OHIO 44056, USA
216-367-7000 • **Toll Free: 800-321-0562** • Fax: 216-367-7022 • Order Fax: 800-223-8305

Toll Free: USA, Canada & Mexico
800-362-0706